J. Sci. Technol. Environ. Inform. 11(01): 727-735 | Rabbani et al. (2021)
EISSN: 2409-7632, Journal home: www.journalbinet.com
Crossref: https://doi.org/10.18801/jstei.110121.73

JSTEI ONLINE JOURNAL
Journal of Science, Technology & Environment Informatics
Journal BiNET Scientific Publication

Development of a low-cost ice crusher for raw fish storage

Muhammad Ashik-E-Rabbani, Kaniz Tamanna, Abu Kawsar Ahmed, Sazzad Mahmud Rifat, Md. Samiul Basir, A. K. M. Sadiqul Alam and A. N. M. Arifur Rahman

Dept. of Farm Power and Machinery, Bangladesh Agricultural University, Mymensingh-2202, Bangladesh

✉ Article received: 25.02.2021; Revised: 05.03.2021; First published online: 30 March 2021.

Article Information

Key Words:
Low cost, raw fish-storage, ice-crusher, machine capacity

Access by Smart Phone

For any information:
ashik@bau.edu.bd

ABSTRACT

The fisheries sector in Bangladesh undergoes various post-harvest problems: the high post-harvest loss of fish. As fish is highly perishable, it needs proper handling, processing, and distribution in time. Ice is the major and primary material that is used in Bangladesh for fish preservation. Different methods are used for crushing ice. In the traditional method, ice is crushed with a heavy load by hand. This method is very laborious and most often does not provide a uniform shape. So, an attempt was taken to develop a low-cost ice crusher machine in the Department of Farm Power and Machinery, Bangladesh Agricultural University, Mymensingh. Based on the design and drawing, the machine was manufactured. Necessary materials to construct the machine were collected from the local market. The machine throughput capacity of the developed ice crusher was found 854.85 kg/hr. with an overall loss of 10.5%. Based on the test parameters, the machine performance was found satisfactory. The machine construction cost was estimated as Tk 11048. The operating cost for ice crushing was calculated, and it was found to be Tk 0.07/kg. This machine was simple at construction and the cost is also low, which indicates that the machine is suitable input for ice crushing to the marginal user. Where electricity is not available and large commercial heavy ice crushers are not available, this machine can be very suitable.

Citation: Rabbani, M. A., Tamanna, K., Ahmed, A. K., Rifat, S. M., Basir, M. S., Alam, A. K. M. S. and Rahman, A. N. M. A. (2021). Development of a low-cost ice crusher for raw fish storage. Journal of Science, Technology and Environment Informatics, 11(01), 727-735. Crossref: https://doi.org/10.18801/jstei.110121.73

I. Introduction

Bangladesh is a densely populated country of 148460 km^2 with 170 million people (Ahmed, 2017). It is fortunate to have an extensive water resource in ponds, natural depressions (haors and beels), lakes, canals, rivers, and estuaries encompassing 3.78 million ha (DoF, 2016). As an agro-based country, the fisheries sector's involvement in the national economy has always been an essential and primary supply of animal protein, livelihood and income opportunities, food and nutritive security, overseas revenues, aquatic biodiversity protection, and socio-economic expansion. Fish is a central item in the Bangladeshi food habit. It delivers the consumer with about 60% of their animal protein consumption (Kashem, 2017; Belton et al., 2011). The average per-capita consumption of fish is between 20 and 25 kg, while the world average is 13 kg (Toufique and Belton, 2014). At Present, per capita fish intake in Bangladesh

is about 14 kg/year compared to a recommended least essential requirement of 18 kg/year; hence there is still a necessity to boost fish consumption in this region (Azad et al. 2016). The demand for fish is escalating, and a reduction in post-harvest losses can significantly contribute to meet this demand, upgrading quality and quantity for consumers and increasing income for producers and suppliers (Bala et al., 2001).

The fisheries sector has a contribution of 4.39% in national GDP and 22.76% in agricultural GDP. Around 10% of this country's entire population, directly or indirectly, depends on the fisheries sector (DoF, 2013). Bangladesh has now become one of the significant fish-producing countries in the world. With a production of 42.77 lakh MT in FY 2017-18, Bangladesh ranks at 3rd position globally (Ali et al. 2019). Bangladesh has attained the goal in fish production with a per capita fish consumption of 62.58 gm/day alongside a set target of 60 gm/day (DoF, 2018).

As fish is a highly perishable food, it requires proper handling, processing, and in-time distribution with proper quality assurance (Rifat et al., 2019). The fisheries sector in Bangladesh suffers from a substantial extent of post-harvest loss due to ignorance and negligence in managing and processing at different stages of the supply chain from the harvest to retail distribution. It also consequences an enormous economic shortfall for the fish sellers and processors. In the traditional procedure, ice is crushed with a heavy substance by hand, which is very laborious and often does not provide a uniform shape. Although some ice crushers are available in some limited areas for commercial objectives, none of them is experimentally built up and a vast amount of loss occurs simultaneously. Considering these entire situations stated above, an attempt was taken to develop a low-cost ice crusher machine for raw fish storage, which can concern food security and public health. The specific objectives of this study were to develop a low-cost ice block crusher and to test the ice block crusher performance.

II. Materials and Methods

The machine contains four basic functional units, namely (Figure 01)

i. Power unit
ii. Feeding unit
iii. Crushing unit
iv. Outlet

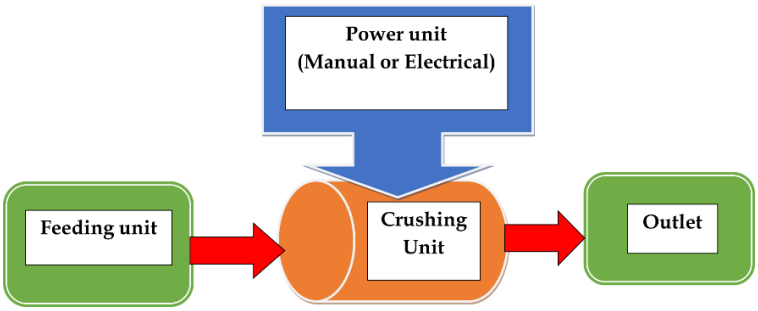

Figure 01. Functional layout of the developed ice crusher

Power unit

The machine has two (Human power and electric motor) optional sources of power. In case of availability of electricity, an electric motor can operate the machine. On the other hand, the arrangement of the handle can be made by manual power.

Feeding unit

Its function is to feed the ice block and then carry the ice block to the crushing chamber. The inclined inert flat plate of this unit helps to slide down the ice block easily.

Crushing unit

This unit's function is to crush the ice block with spikes attached to the rotating cylinder. The beating force of these spikes depends on the power being supplied.

Outlet

This unit holds a simple arrangement to let the crushed ice be passed out from the crushing unit directly to the bucket or any other collecting devices.

Design and development of the machine

Design considerations

The followings are some considerations followed to develop the low-cost ice crusher machine:

- The size of the feeding unit
- The size of the cylinder
- The spacing of the spikes over the cylinder
- The size of ice block
- The machine should be simple in construction so that the local manufacturers can easily manufacture it
- The cost of machine must be within the range of capability of all sorts of fisherman

Crusher speed consideration

The idea of crusher speed to crush the ice block was generated by observing the crusher speed of the available ice crusher found locally. The rated speed was found on an average of 472 rpm. Based on this output, the desired crusher speed was considered, and the power transmission system was arranged based on this speed.

Location of construction

The machine was constructed at the Department of Farm Power and Machinery workshop, Bangladesh Agricultural University, Mymensingh.

Construction of machine

The whole machine can be divided into five fundamental parts to explain the construction as follows.

Feeding unit: This unit consists of a 6mm thick MS sheet formed in a rectangular shape of 22" ×16.5". The outer sides of the sheet were joined with a 1.5" angle bar to support the ice while feeding is done. The whole feeding unit is 45° inclined with the horizontal surface to allow the ice's sliding effect to fall due to its weight while feeding is done. At the lower end of the unit, there is a 16.5" long MS Rod of 6mm thickness which will help the feed ice hold until it has been fully crushed.

Crushing unit: The crushing unit consists of the following materials

- MS Plate of 10" diameters and 6mm thick (3 no's)
- 30" long Bush pipe with 1.25" diameter
- 30.5" long main MS Shaft of 1.5" thickness
- Spike made of MS bar (4.5"×2"×0.25")
- MS shaft of 15" length and 1.25" diameter (2 no's)
- 1.5" Angle bar (2 no's)
- Tin sheet (2 no's)

At first, four holes were made on each MS plate with the help of a gas cutter. Then with the help of a lathe machine, 28 no's of individual bush pipe of 1" length and 1.25" diameter was made. Then the main shaft was attached to the plates with the help of a welding machine. An equal distance of 7.5" was maintained from each plate to another plate. Then the bush pipe holding shafts were joined to each hole of the three plates. To attach the spikes, welding was done individually. Totally two series of spikes holding by the shaft were made. Finally, two pieces of the tin sheet were attached to the whole arrangement forming a cylindrical shape of 17"diameters. This final arrangement provided a movable cylinder having 1" spikes in working condition while beating the ice block.

Outlet: The machine's outlet has a straightforward arrangement providing a large open space to let the crushed ice be fall on the basket directly from the crushing unit. The overall space had a size of 16.5" ×13".

Power transmission unit: This unit was arranged with a simple gear pinion mechanism at the right-hand side of the machine for manual crushing of the ice block. The gear was 104 teethed with a weight of 22 kg and it had a diameter of 16.5". The pinion was 48 teethed with a heavy load of 8 kg and it had a diameter of 8". The gear and pinion were directly engaged to each other. The power mechanism was attached to the crusher cylinder's main shaft with a cover bearing. To move the heavy gear, a handle was attached near the outer corner of the gear. The machine's left-hand side was ready to use to operate the machine with other power sources such as with an electric motor or with an engine. For this purpose, the main shaft of the crusher cylinder was 7.5" extended to the machine's left side to support the gear pinion mechanism.

Body of machine: The body, cover, and base of the machine were constructed with a 0.2" MS Sheet. The overall size of the cover was 22"×16.5" and it was curved with 10" radii. The main body of the machine was sized with 22"×16.5"×14". The base was sized with 36"×21"×20". Four wheels were provided to make the machine easily movable. The front wheels were flexible to move left to right. Otherwise, the back wheels were not flexible and only fixed to move only in one direction. The fixed wheels were made from bush pipe and the movable wheels were made from bearing.

Performance test of the machine

Materials needed to test the machine

To test the performance of the machine, the following materials were required

- Ice block (19" ×11.5" ×.3.25")
- Weight balance machine
- Measuring tape
- Stopwatch
- Slide calipers
- Ice box (3 no's) (12" ×10" ×8")

Preparation of ice box

To store the crushed ice in a room for the observation of storage duration, 3 nos. of iceboxes were prepared with the help of cock sheet. The size of each icebox was 12" ×10" ×8".

Testing method

The developed machine was tested at the FPM workshop, BAU, Mymensingh. At first, the machine was placed on a flat concrete surface. A bamboo basket covered with a plastic sheet was then placed just under the bottom of the machine outlet. The weight of a single ice block was measured. With the help of human power, the handle connected with the crushing unit was moved, and the ice block was fed into the feeding unit. Right at that time, both the feeding and crushing time were measured using the stopwatch. When the crushing was completed, the weight of the crushed ice including the basket was measured. The size of different-sized ice was measured with a slide caliper to identify the crushed ice size. During this process, plastic gloves were put on the hands to minimize the melting process of ice. The step-by-step attempts of testing the crusher are shown in the figures below (Figure 02 to Figure 05).

Figure 02. Experimental setup of performance test

Figure 03. Crushed ice

Figure 04. Size measurement

Figure 05. Different size of crushed ice

After that, the crushed ice was poured into the air-tight ice boxes at the same level. Then the boxes were weighted in the weight balance. Finally, the boxes were placed in a room to store them. The room temperature was measured at that time. To calculate the rate of weight loss, the weight of the stored ice boxes was taken from time to time until the crushed ice was fully melted. Every time the room temperature was measured with the help of a thermometer.

Machine test parameters

Quantitative test parameters

Feeding capacity: The feeding capacity was calculated by knowing the ice block's weight with the help of a weight balance machine and by knowing the feeding time with the help of a stopwatch. The following expression was used to compute it:

$$\text{Feed capacity } \left(\frac{\text{kg}}{\text{hr}}\right) = \frac{\text{Weight of ice block}}{\text{Time of feeding}}$$

Machine capacity: Machine capacity of the ice block crusher was computed by knowing the weight of crushed ice and knowing the time required to crush the whole ice block. The following expression was used to calculate it:

$$\text{Machine capacity } \left(\frac{\text{kg}}{\text{hr}}\right) = \frac{\text{Weight of ice}}{\text{Time of crushing}}$$

Fineness of the ice flakes: The fineness of crushed ice was measured in terms of the size of the crushed ice in cm. The size was measured with the help of slide calipers.

Qualitative test parameters

Duration of crushed ice storage: The duration of the crushed ice was measured in an hour by observing time to time stored ice condition. By counting the overall hours of ice storage, the final duration was found.

Rate of weight loss during storage: This qualitative parameter was achieved by obtaining the weight of crushed ice from time to time.

III. Results and Discussion

Development of ice crusher machine

Photographic view: The developed machine is a manually operated ice crusher machine. This machine is operated by turning the handle attached to the gear portion (Figure 06).

Figure 06. Photographic view of developed ice crusher

Auto cad Views: The auto cad design of the ice crusher machine is represented here part by part (Figure 07 to Figure 14). The machine is illustrated in the isometric view (Figure 15).

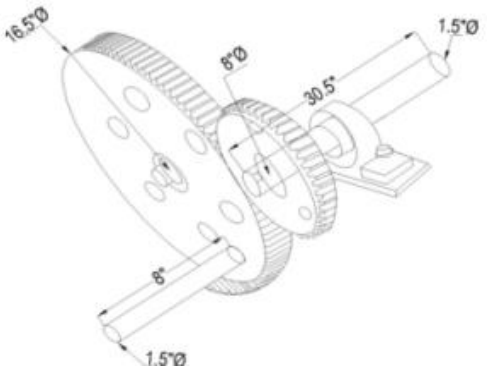

Figure 07. Power Transmission

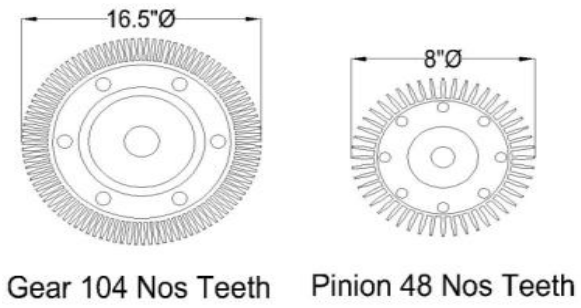

Figure 08. Gear and Pinion

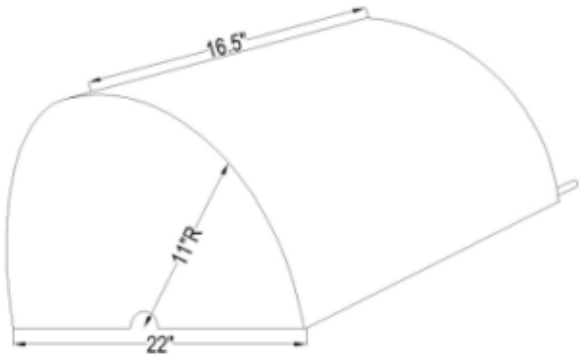

Figure 09. Cover

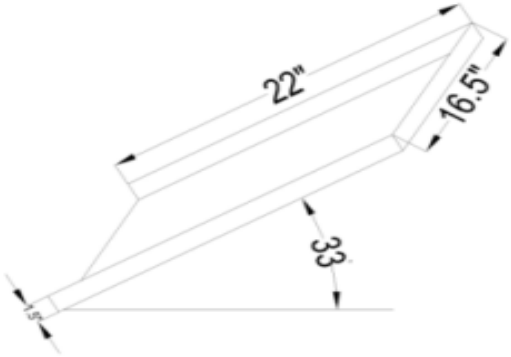

Figure 10. Feeding Tray

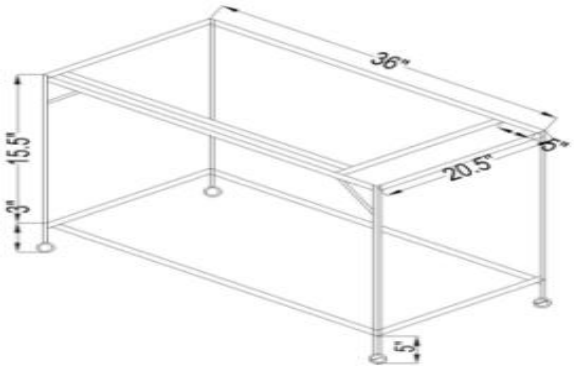

Figure 11. Frame

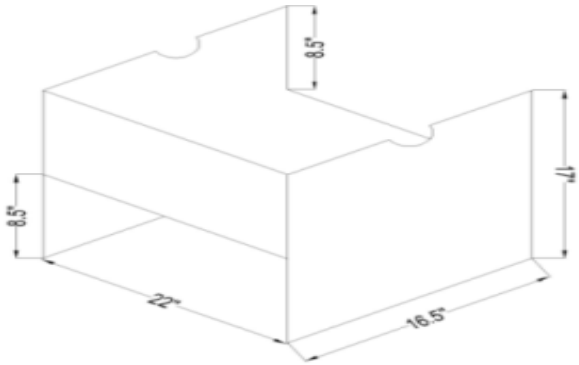

Figure 12. Main body

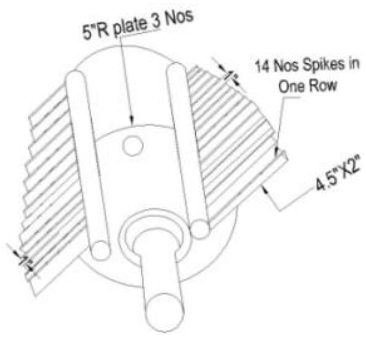

Figure 13. Spike and shaft

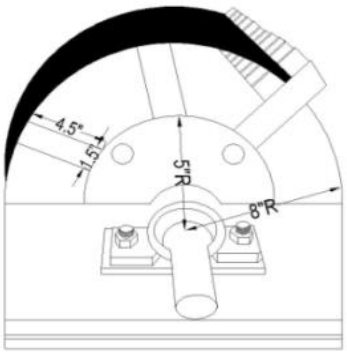

Figure 14. Crushing unit Figure

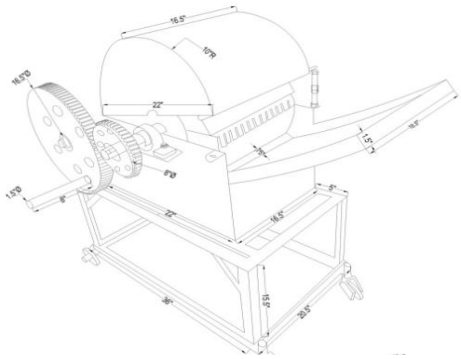

Figure 15. Isometric view of ice crusher machine

Construction cost of the developed crusher

Materials required to construct the developed crusher were collected from the local market. The specification, quantities, and costs of the materials are shown below (Table 01).

Table 01. Construction cost of the ice crusher machine

Name of parts	No. of parts	Size	Quantity(kg)/pcs	Cost (tk/kg)	Total cost (tk)
Gear	1	103 teeth	18	55	990
Pinion	1	48 teeth	7	95	665
MS sheet	7	6 mm	35	56	1960
Bush Pipe	1	1.5”	6.6	98	646
Shaft (small)	1	1”	7.3	60	438
Main shaft	1	1.5”	9	75	675
Bearing	2	1”	-	40	80
MS sheet	2	4”	6.8	80	544
Spike (bar)	3	¼”	8.3	88	730
Nut-bolt	6	3”, 2”, 4”	1.2	150	180
Angle bar	5	1.5”	20	32	640
Bearing	2	1.5”	-	250/piece	500
Manufacturing cost					3000
Total cost					**11048**

Performance test of the developed ice crusher machine

Quantitative test outcome: The testing parameters that came out after the performance test of the machine are shown below (Table 02)

Table 02. Performance test parameters of developed ice crusher

Parameters		Trial 1	Trial 2	Average
Wt. of ice block (kg)		10.25	9.81	10.03
Wt. of crushed ice (kg)		9.42	8.53	8.97
Wt. loss (%)		8.1	13	10.5
Time of feeding (sec)		32	35	33.5
Time of crushing (sec)		36	40	38
Feeding rate (kg/hr.)		1153.13	1009.03	1081.08
Machine capacity (kg/hr.)		942	767.7	854.85
Size of crushed ice (cm)	Small (>1.5)	0.76	1.27	1.02
	Medium (1.5-4)	3.81	3.3	3.55
	Large (<4)	6.35	5.08	5.72
Outside temperature (°c)		22	23	22.5

It was found that after averaging the values of the two individual trials, the average feeding time of a single ice block was 33.5 seconds, the average crushing time of a single ice block was 38 seconds, the feeding rate was 1081.08 kg/hr. and the machine capacity was 854.85 kg/hr. The small, medium and large-sized ices were on average 1.02 cm, 3.55 cm, and 5.72 cm, respectively (Table 02).

Qualitative test outcome: The qualitative outcome of the two trials was approached to show the graphical representation of the weight loss rate of the crushed ice with time intervals. The graphical representation of the weight loss rate with duration for trial one and trial two respectively, shows the qualitative outcome (Figure 16 and Figure 17).

Two linear equations were developed from figures (Figure 16 and Figure 17). The slope of these linear equations is -0.055 for trial 1 and -0.063 for trial 2. The average slope is -0.059. ‘R^2’ is the regression coefficient. The standard value of ‘R^2’ is 1. The value of “R^2” is 0.986 for trial 1 and 0.989 for trial 2. The relationship between wt. of crushed ice and duration of storage is 98.75% linear on average. Figure 21 and figure 22 show that the duration of crushed ice storage was up to 72 hours for trial 1 and 66 hours for trial 2. So, on average, the developed machine provided an amount of crushed ice stored for up to 69 hours.

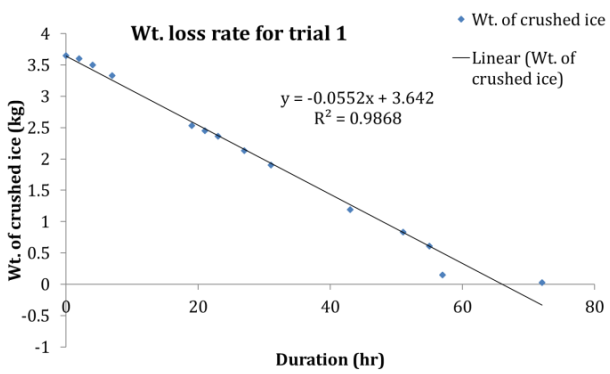

Figure 16. Weight loss of crushed ice with time

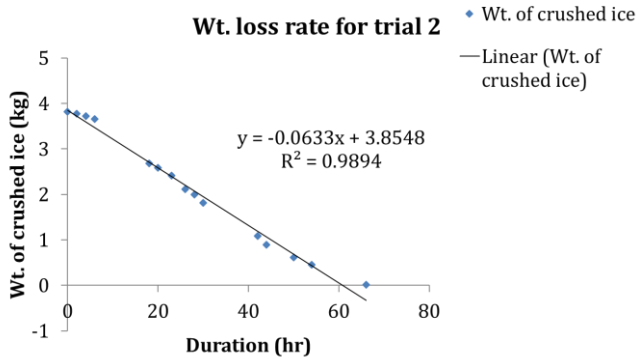

Figure 17. Weight loss of crushed ice with time

Cost analysis of developed ice crusher

The cost analysis of the developed ice crusher machine was calculated based on different costs and annual usage of the machine. The cost of the developed ice crusher was found 0.07 Tk/kg.

IV. Conclusion

As it was a first-time attempt to develop an ice crusher machine for fish storage purposes, the research outcome was quite suitable with a new experience. The two purposes were fulfilled quite satisfactorily and the whole research approached the following findings just after the completion of the research work. A low-cost ice crusher machine was developed, having a very simple and easy operation system. The developed ice crusher machine provided the advantage of being easily portable. The developed crusher provided a great cost-saving opportunity rather than paying the bill for electricity. The machine capacity of the developed machine was 854.85 kg/hr. The crushing time for a single ice block was found 38 sec and the feeding time was almost 34.5sec. The machine provided three different sized pieces of ice as 1.02 cm, 3.55 cm, and 5.72 cm for small, medium and large size. Another noticeable outcome of the developed ice crusher was the crushed ice duration, which was 69hr. The cost analysis provided the cost of crushing as 0.07tk/kg for the developed crusher.

Acknowledgement

The authors feel thankful to the "Krishi Gobesbhona Foundation (KGF)" of Bangladesh Agricultural Research Council (BARC) through Project ID No-(FRP): TF 38-F/2017 titled "Post-Harvest Loss Reduction and Value-Addition of Fresh Water Fish" for their financial support.

References

[1]. Ahmed, C. S. M. (2017). Delving Deeper: Branding Bangladesh through Maritime Strategy. NDC E-journal, 16(1), 56-78.

[2]. Ali, M. A., Alam, M. R., Molla, M. S. H. and Bokhtiar, S. M. (2019). Agricultural Research and Development: Policy and Program Priorities in Bangladesh. Agricultural Policy and Program Framework: Priority Areas for Research and Development in South Asia, 46.

[3]. Azad, K. N., Salam, M. A. and Azad, K. N. (2016). Aquaponics in Bangladesh: current status and future prospects. Journal of Bioscience and Agriculture Research, 7(02), 669-677. https://doi.org/10.18801/jbar.070216.79

[4]. Bala, B. K. and Mondol, M. R. A. (2001). Experimental investigation on solar drying of fish using solar tunnel dryer. Drying Technology, 19(2), 427-436. https://doi.org/10.1081/DRT-100102915

[5]. Belton, B., Karim, M., Thilsted, S., Jahan, K. M., Collis, W. and Phillips, M. (2011). Review of aquaculture and fish consumption in Bangladesh. Studies and Reviews 2011-53. The WorldFish Center. November 2011.

[6]. DoF (2013). National Fisheries Annual Report-2009. Department of Fisheries, Ministry of Fisheries and Livestock, Matshya Bhaban, Dhaka, people's republic of Bangladesh.

[7]. DoF (2016). Fishery Statistical Yearbook of Bangladesh 2003–2004. Fisheries Resources Survey System, Department of Fisheries, Ministry of Fisheries and Livestock, Matshya Bhaban, Dhaka, 46 pp.
[8]. DoF (2018). Fishery Statistical Yearbook of Bangladesh 2017-18. Department of Fisheries, Ministry of Fisheries and Livestock, Matshya Bhaban.
[9]. Kashem, M. A., Siddiqui, A. A. M. and Mahbubur, M. (2017). Coastal zone of Khulna district in Bangladesh: Fisheries land use and its potentials. International Journal of Fisheries and Aquatic Studies, 5, 599-608.
[10]. Rifat, S. M., Ashik-E-Rabbani, M., Basir, M. S. and Alam, A. N. (2019). Design and fabrication of an aerator cum oxygen accumulator for live fish transport. Journal of the Bangladesh Agricultural University, 17(4), 592-598. https://doi.org/10.3329/jbau.v17i4.44630
[11]. Toufique, K. A., and Belton, B. (2014). Is aquaculture pro-poor? Empirical evidence of impacts on fish consumption in Bangladesh. World Development, 64, 609-620. https://doi.org/10.1016/j.worlddev.2014.06.035

HOW TO CITE THIS ARTICLE?

Crossref: https://doi.org/10.18801/jstei.110121.73

MLA
Rabbani, M. A. et al. "Development of a low-cost ice crusher for raw fish storage" Journal of Science, Technology and Environment Informatics 11(01) (2021): 727-735.

APA
Rabbani, M. A., Tamanna, K., Ahmed, A. K., Rifat, S. M., Basir, M. S., Alam, A. K. M. S. and Rahman, A. N. M. A. (2021). Development of a low-cost ice crusher for raw fish storage. Journal of Science, Technology and Environment Informatics, 11(01), 727-735.

Chicago
Rabbani, M. A., Tamanna, K., Ahmed, A. K., Rifat, S. M., Basir, M. S., Alam, A. K. M. S. and Rahman, A. N. M. A. " Development of a low-cost ice crusher for raw fish storage". Journal of Science, Technology and Environment Informatics 11(01) (2021): 727-735.

Harvard
Rabbani, M. A., Tamanna, K., Ahmed, A. K., Rifat, S. M., Basir, M. S., Alam, A. K. M. S. and Rahman, A. N. M. A. 2021. Development of a low-cost ice crusher for raw fish storage. Journal of Science, Technology and Environment Informatics, 11(01), pp. 727-735.

Vancouver
Rabbani, MA, Tamanna, K, Ahmed, AK, Rifat, SM, Basir, MS, Alam, AKMS and Rahman, ANMA. Development of a low-cost ice crusher for raw fish storage. Journal of Science, Technology and Environment Informatics. 2021 March 11(01): 727-735.